Transmittal, reproduction, dissemination and/or editing of this document as well as utilization of its contents and communication thereof to others without express authorization are prohibited. Offenders will be held liable for payment of damages. All rights created by patent grant or registration of a utility model or design patent are reserved.

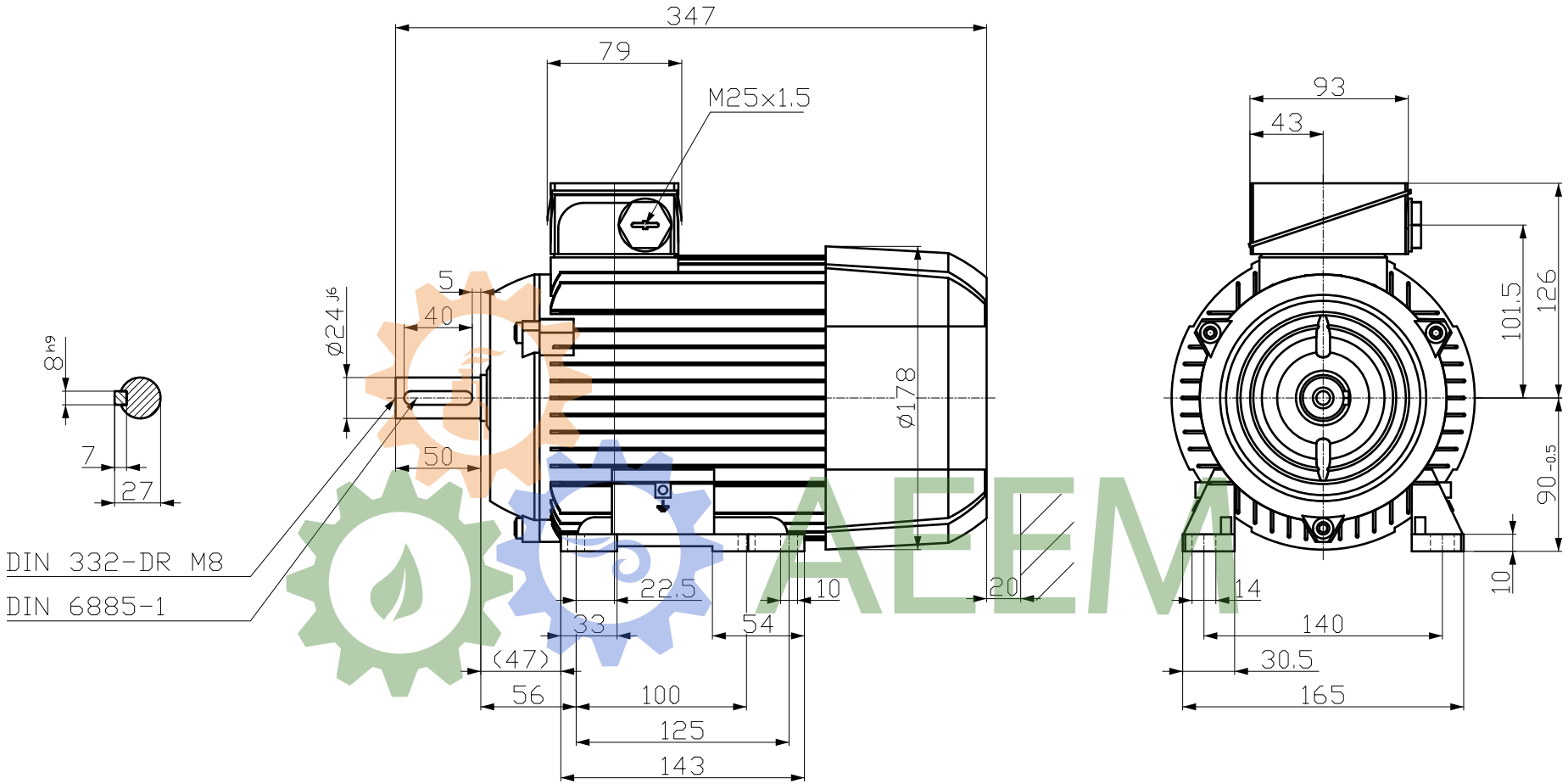

Technische nderungen vorbehalten!
Technical data are subject to change!

Tolerance	Surface	Material	Weight -	Scale mm
1LE1003-0EB02-1AA4 -	Author	Dimensional drawing MaÇzeichnung		
	Creator 29/07/2025 SPC			
	Approval Created automatically			
	Department IN LVM			
	Change Order	MLFB	Doc Type	
INNOMOTICS	Doc State Released	Item No	Paper Size A3	
	Revision AA Index RS	Doc No	1st Language en 2nd Language de	
© Innomotics 2025	Project No -	Ref No -	Sheet 1 of 1	

Restricted