Transmittal, reproduction, dissemination and/or editing of this document as well as utilization of its contents and communication thereof to others without express authorization are prohibited. Offenders will be held liable for the payment of damages. All rights created by patent grant or registration of a utility model or design patent are reserved.

Weitergabe sowie Vervielfältigung, Verbreitung und/oder Bearbeitung dieses Dokumentes, Verwertung und Mitteilung seines Inhaltes sind verboten, soweit nicht ausdrücklich gestattet. Zuwiderhandlungen verpflichten zu Schadensersatz. Alle Rechte für den Fall der Patenterteilung, Gebrauchsmuster- oder Geschmacksmustereintragung vorbehalten.

Confidential tire de secret d'entreprise. Tous droits réservés.
Comunicado como secreto empresarial. Reservados todos os direitos.
[redacted]
Confiado como secreto de empresa. Nos reservamos todos los derechos.

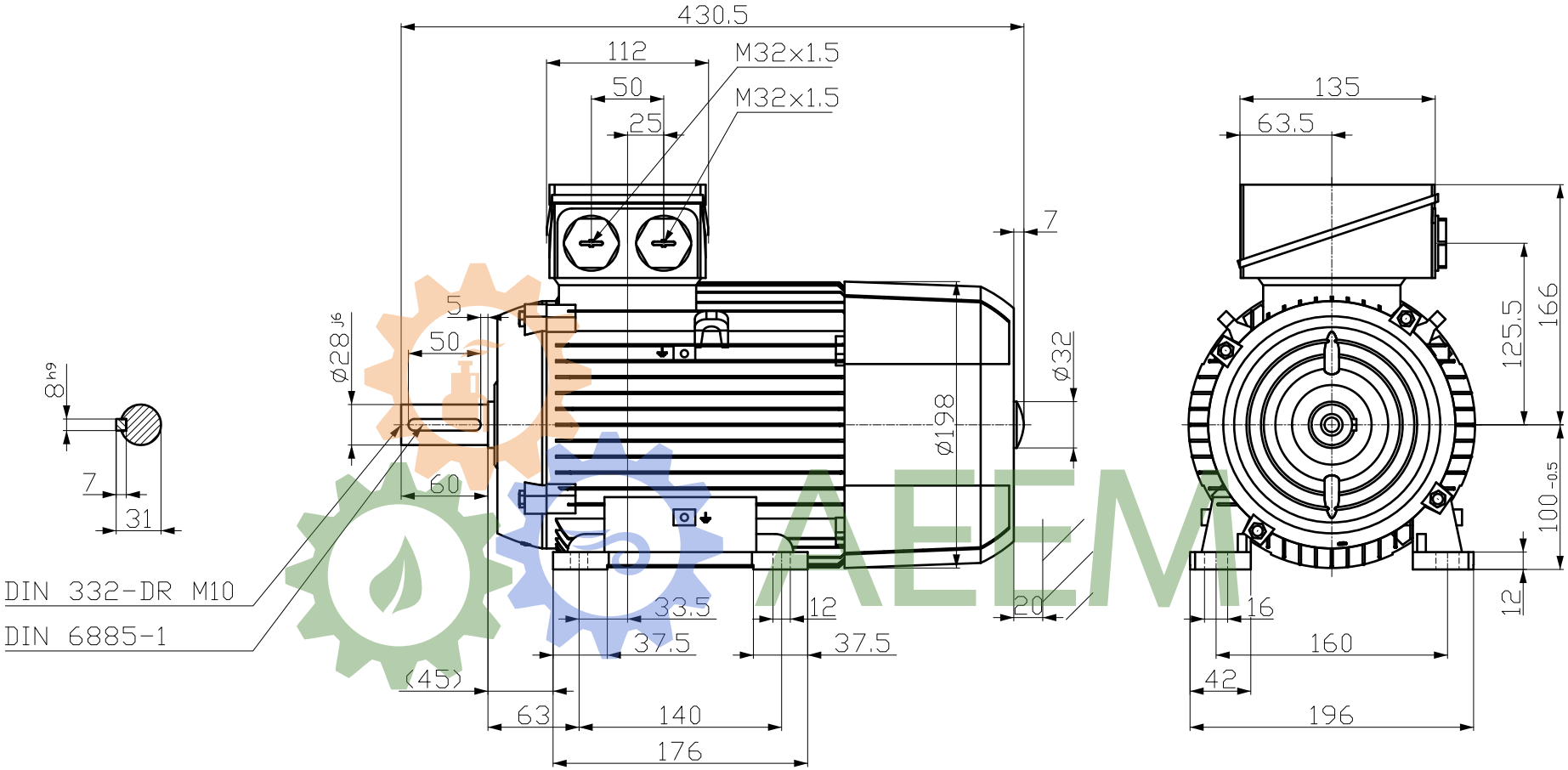

AEEM

Technische nderungen vorbehalten!
Technical data are subject to change!

Tolerance	Surface	Material	Weight -	Scale mm
1LE1003-1AB42-1AA4 -	Author Creator 16/07/2025 SPC Approval Created automatically Department IN LVM	Dimensional drawing MaÇzeichnung		
	Change Order	MLFB		Doc Type
INNOMOTICS	Doc State Released Revision AA Index RS	Item No		Paper Size A3
		Doc No		1st Language en 2nd Language de
© Innomotics 2025	Project No -	Ref No -		Sheet 1 of 1

Restricted