Transmittal, reproduction, dissemination and/or editing of this document as well as utilization of its contents and communication thereof to others without express authorization are prohibited. Offenders will be held liable for the payment of damages. All rights created by patent grant or registration of a utility model or design patent are reserved.

Weitergabe sowie Vervielfältigung, Verbreitung und/oder Bearbeitung dieses Dokumentes, Verwertung und Mitteilung seines Inhaltes sind verboten, soweit nicht ausdrücklich gestattet. Zuwiderhandlungen verpflichten zu Schadensersatz. Alle Rechte für den Fall der Patenterteilung, Gebrauchsmuster- oder Geschmacksmustereintragung vorbehalten.

Confidential tire de secret d'entreprise. Tous droits réservés.
Comunicado como secreto empresarial. Reservados todos os direitos.
[redacted]
Confiado como secreto de empresa. Nos reservamos todos los derechos.

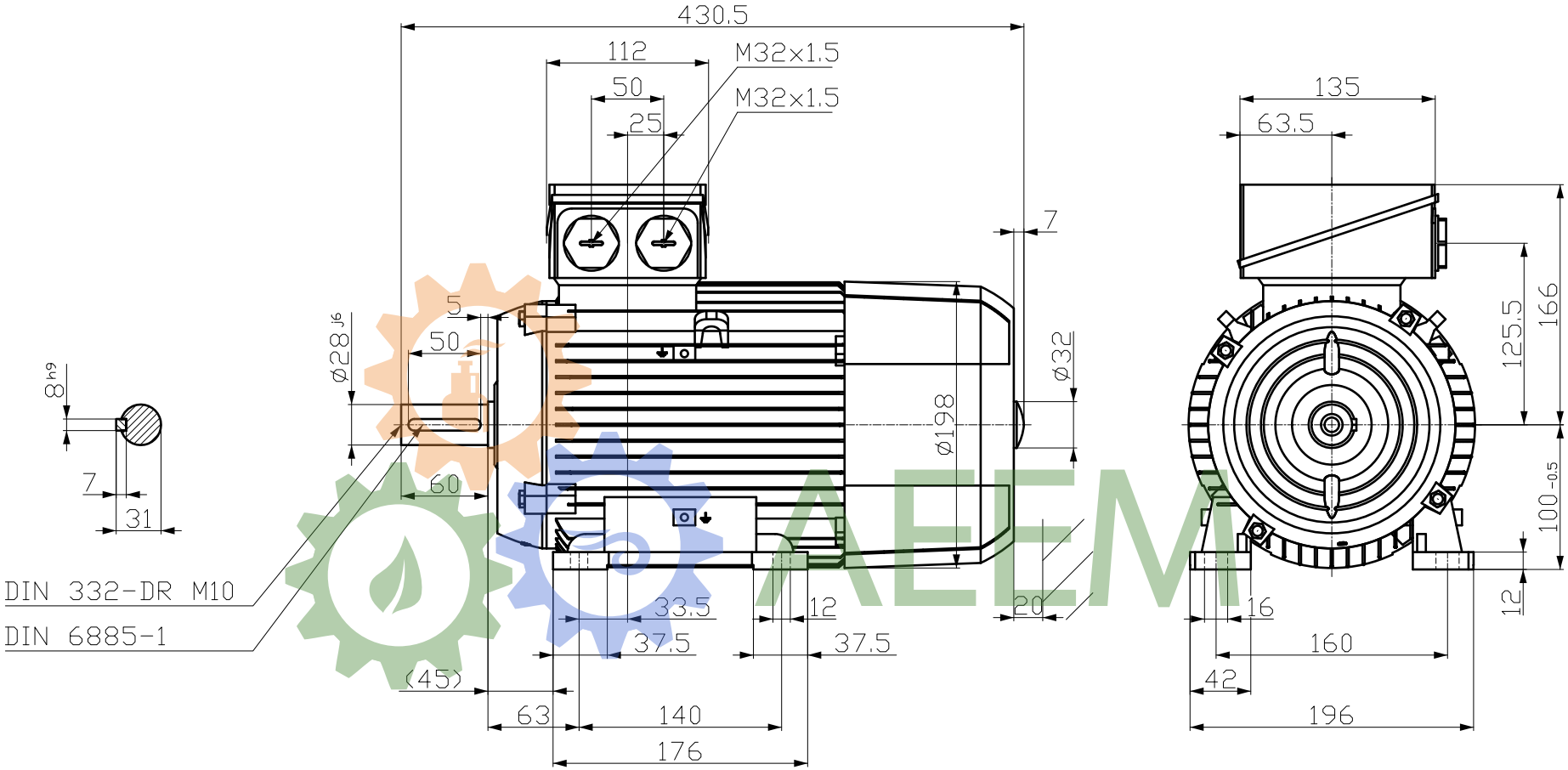


AEEM

Technische nderungen vorbehalten!
Technical data are subject to change!

| | | | | |
|---|---|---|---|---|
| Tolerance | Surface | Material | Weight - | Scale mm |
| 1LE1003-1AD52-1AA4<br>- | Author<br>Creator 10/07/2025 SPC<br>Approval Created automatically<br>Department IN LVM | Dimensional drawing<br>MaÇzeichnung | | |
| | Change Order | MLFB | Doc Type | |
| INNOMOTICS | Doc State Released<br>Revision AA Index RS | Item No | Paper Size A3 | |
| | | Doc No | 1st Language en<br>2nd Language de | |
| © Innomotics 2025 | Project No - | Ref No - | Sheet 1 of 1 | |

Restricted