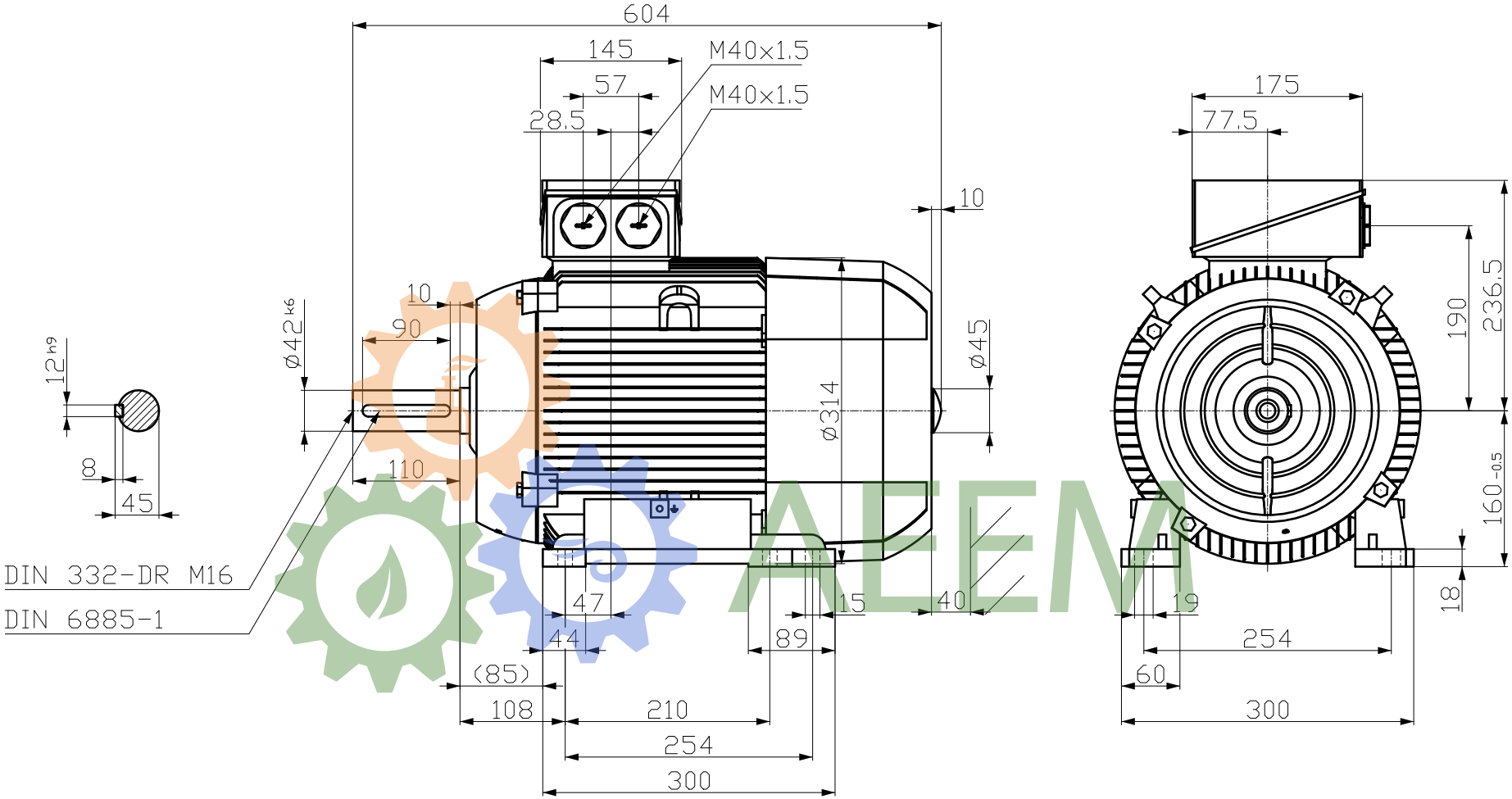

Technische nderungen vorbehalten!
Technical data are subject to change!

Tolerance	Surface	Material	Weight -	Scale mm
1LE1003-1DB22-1AA4 -	Author Creator 29/07/2025 SPC Approval Created automatically Department IN LVM	Dimensional drawing MaÇzeichnung		
	Change Order	MLFB	Doc Type	
INNOMOTICS	Doc State Released Revision AA Index RS	Item No	Paper Size A3	
		Doc No	1st Language en 2nd Language de	
© Innomotics 2025	Project No -	Ref No -	Sheet 1 of 1	

Restricted