Transmittal, reproduction, dissemination and/or editing of this document as well as utilization of its contents and communication thereof to others without express authorization are prohibited. Offenders will be held liable for damages. All rights created by patent grant or registration of a utility model or design patent are reserved.

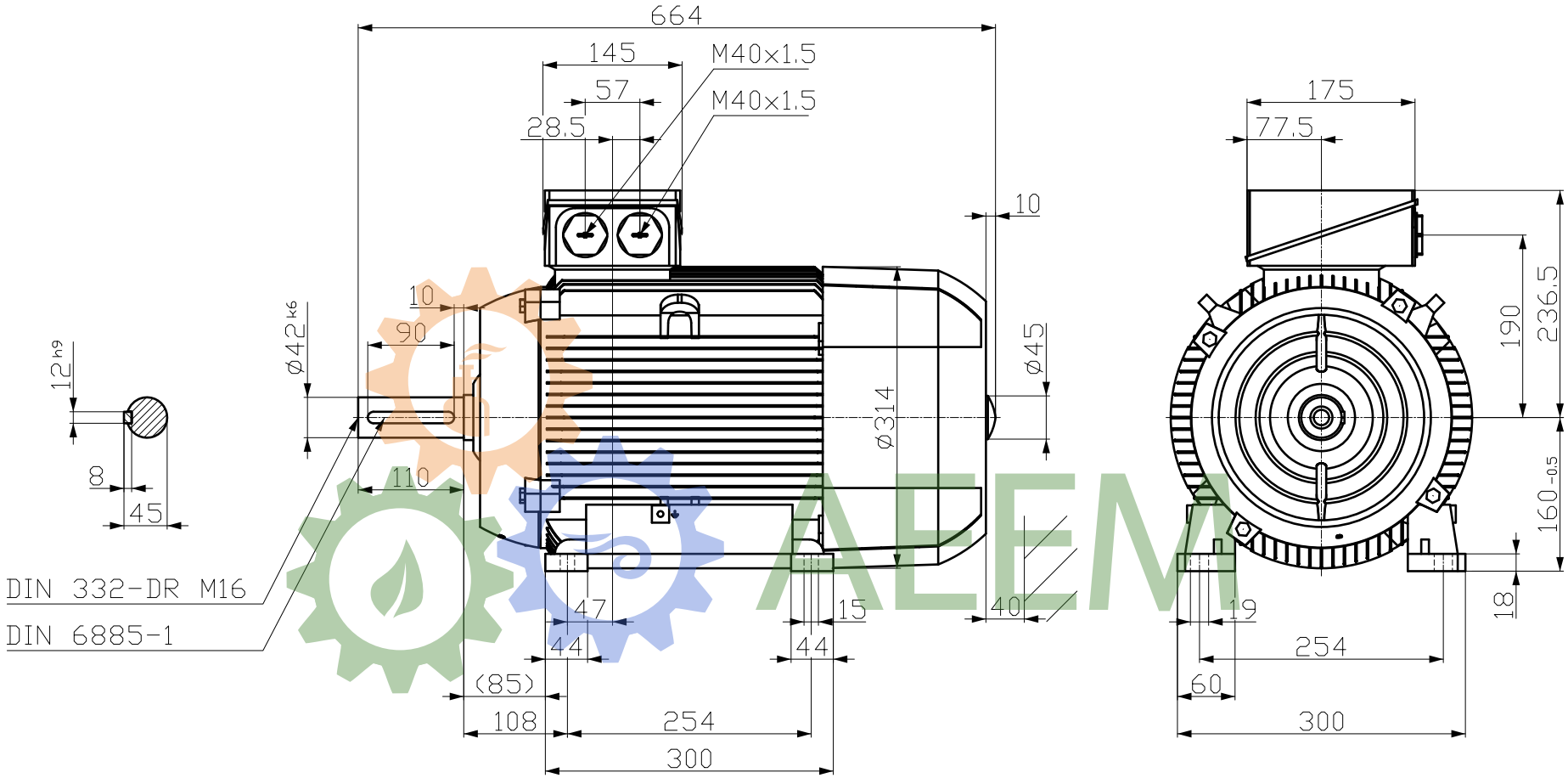

AEEM

Tolerance	Surface	Material	Weight	Scale
			-	mm

1LE1003-1DC43-3AA4 -	Author	Dimensional drawing MaÇzeichnung	
	Creator 28/08/2025 SPC		
	Approval Created automatically		
	Department IN LVM		
	Change Order	MLFB	Doc Type
INNOMOTICS	Doc State Released	Item No	Paper Size A3
	Revision AA Index RS	Doc No	1st Language en 2nd Language de
© Innomotics 2025	Project No -	Ref No -	Sheet 1 of 1

Technische nderungen vorbehalten!
Technical data are subject to change!

Restricted