Transmittal, reproduction, dissemination and/or editing of this document as well as utilization of its contents and communication thereof to others without express authorization are prohibited. Offenders will be held liable for payment of damages. All rights created by patent grant or registration of a utility model or design patent are reserved.

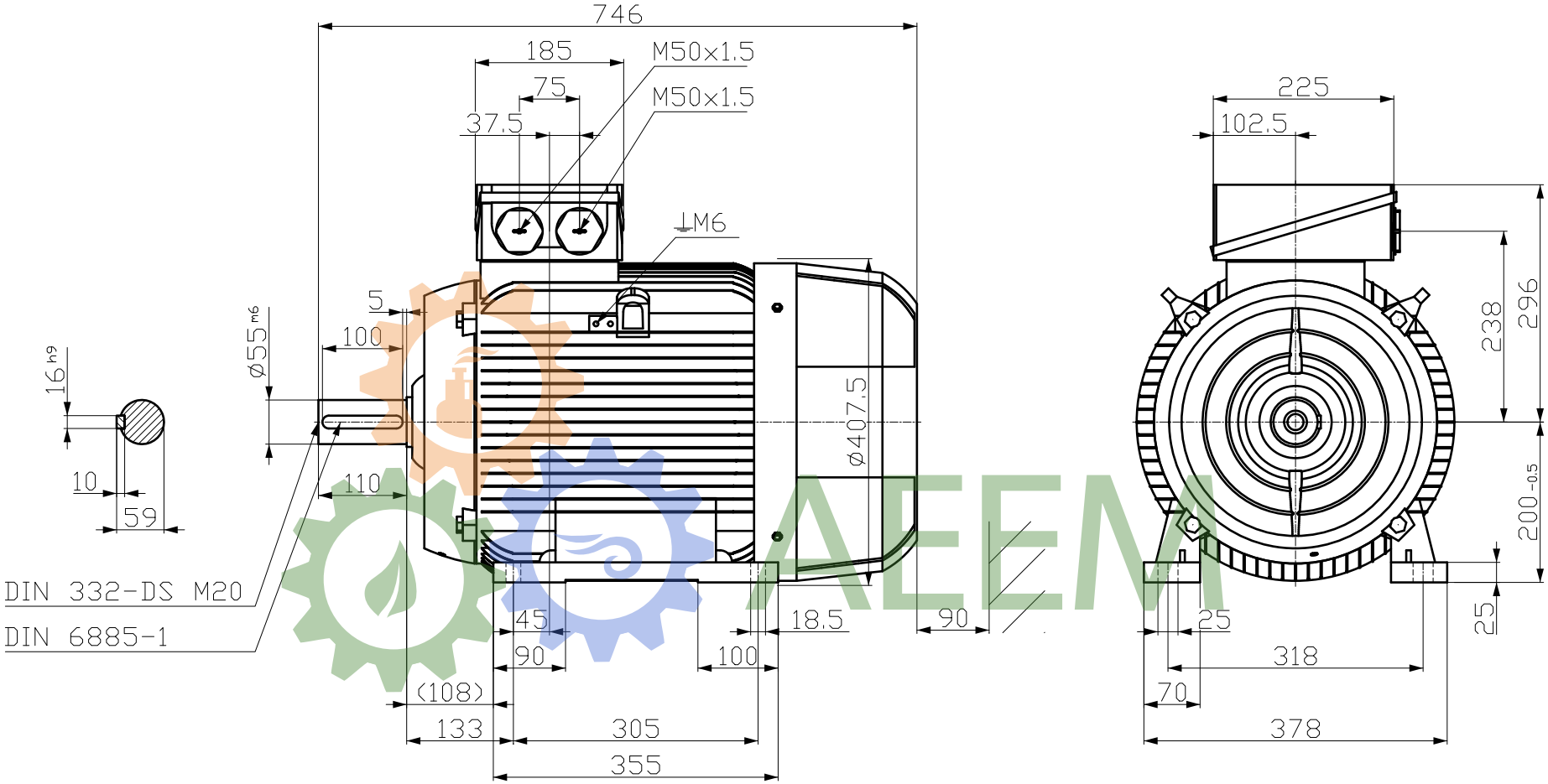

Tolerance	Surface	Material	Weight	Scale
			-	mm
1LE1003-2AD52-1AA4 -	Author Creator 29/07/2025 SPC Approval Created automatically Department IN LVM	Dimensional drawing MaÇzeichnung		
	Change Order	MLFB	Doc Type	
INNOMOTICS	Doc State Released Revision AA Index RS	Item No	Paper Size A3	
		Doc No	1st Language en 2nd Language de	
© Innomotics 2025	Project No -	Ref No -	Sheet 1 of 1	

Technische nderungen vorbehalten!
Technical data are subject to change!

Restricted